329,000

The number of words in the average Biology textbook

Science:

A Survival Guide

BAYSIDE SCHOOL
50TH ANNIVERSARY

Bayside Science Department

Tonight's Aim

- Information about the sciences at A-level & at GCSE
- Choosing sciences for A-levels: important points to consider
- Study tips for each of the sciences
- Pending questions

01

At *GCSE*

Which is better, Combined Science or Separate Science?

What *is* the difference?

AQA
Combined Science
(Trilogy)
- **2 GCSE grades (1-9)**
- 6 Exams
(2 Bio, 2 Chem, 2 Phys)
- 1hour 15mins

AQA
Triple Science
(Separate sciences)
- **3 GCSE grades (1-9)**
- 6 Exams
(2 Bio, 2 Chem, 2 Phys)
- 1hour 45 mins

What *is* the difference?

AQA
Combined Science

• 2 G

(2 Bi

AQA
Triple Science

ces)
(1-9)

Phys)
s

Same level of difficulty (both GCSE courses), ***BUT*** Triple has more science content = ***THREE*** **more SCIENCE lessons** a week!

Students who will benefit the most from the Separate Science course include those who:

1) **Enjoy** science!

2) Are **coping well** with science at year 9 level

3) Will be taking **two or more** sciences at A level

St t from

lude

2) 9 level

more sciences at

A level

IMPORTANT NOTE:

Students who sit the combined course can ***still*** go on to study sciences at A-level!

02

At *A-level*: Choosing the sciences

3 exams each subject @ 2 hours each paper.

6 hours of exams for *each* science!

Long and short answer questions
Multiple choice questions
Practical skills
Mathematical skills
Data Analysis
Critical analysis of experimental data
Extended response questions (Biology)
Comprehension questions (Biology)
25 mark essay (Biology)

Who would benefit from picking science subjects at A-level?

- ✓ Students who ***need*** science as a prerequisite for university
- ✓ Students who are good at ***and*** enjoy the sciences

University Entry Requirements

Whilst some degrees such as medicine and engineering do have prerequisites, entry requirements for most courses are ***mostly flexible***.

If a student knows what course they wish to take up at university, it is important that they ***do the research*** – this will ensure that they have a plan and do A levels that are right for them, increasing their chances of success.

Are A-level sciences *hard*?

- ✓ This depends on ***natural inclination*** towards the sciences, ***prior knowledge*** and whether the subject truly ***interests*** the students.
- ✓ The overwhelming majority of students tend to find the sciences ***more difficult than other subjects***.
- ✓ Learning science at A-level presupposes mastery of other subjects and skills, relies ***heavily*** on *mathematical skills*, memorisation, abstract thinking skills as well as motivational drive and resilience.
- ✓ Students often find the jump from GCSE to A-level very big, ***even if*** they did very well in their GCSEs.

What students think science is like…

A+

What science is really like.....

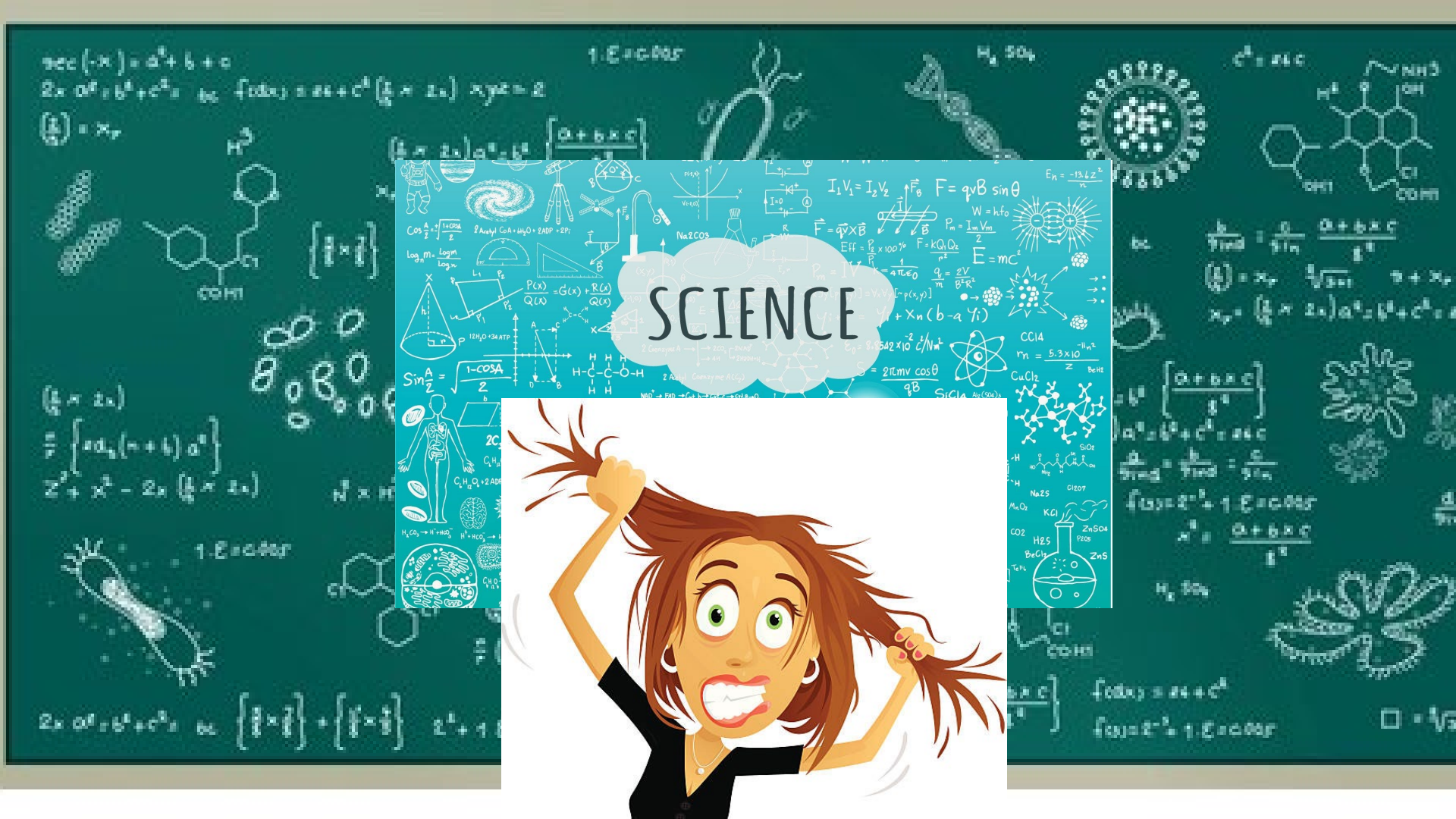
SCIENCE

OUR ADVICE

Research **and assess options** ***thoroughly***

down into the depths of each science before attempting to follow an A-Level in that subject

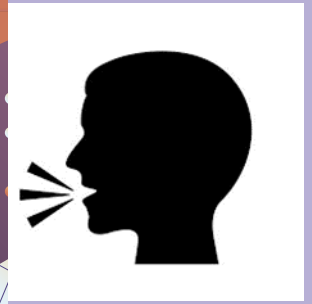

to SUBJECT teachers and ASK for their advice

03

Study Tips

Students experience a high amount of stress when they have upcoming exams or assignments.

The closer to exam period the higher the amount of pressure.

Therefore…

Student's Law Of Tension

$$\text{Pressure} \propto \frac{1}{\text{The Number Of Days Left For the Exams}}$$

Where,

"I will Study tomorrow."

remains constant.

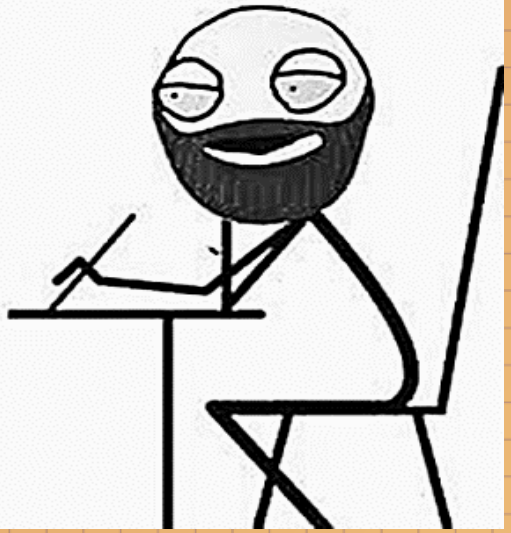

For *all* Sciences

1) Use the scribble technique/Cornell method/videos/flashcards to <u>learn</u> the content…or whichever method they prefer!

2) Attempt and complete all past paper questions

3) Update original notes

Biology

Mark schemes are very specific. When marking practice questions write down correct wording of mark scheme and learn these.

Use diagrams and practice drawing out the processes such as respiration and photosynthesis

Useful websites:

https://www.khanacademy.org/

https://alevelbiology.co.uk/

Chemistry

Practice the maths in Chemistry!

Create a masterlist of definitions and formulas

Draw a map of chemical reaction pathways

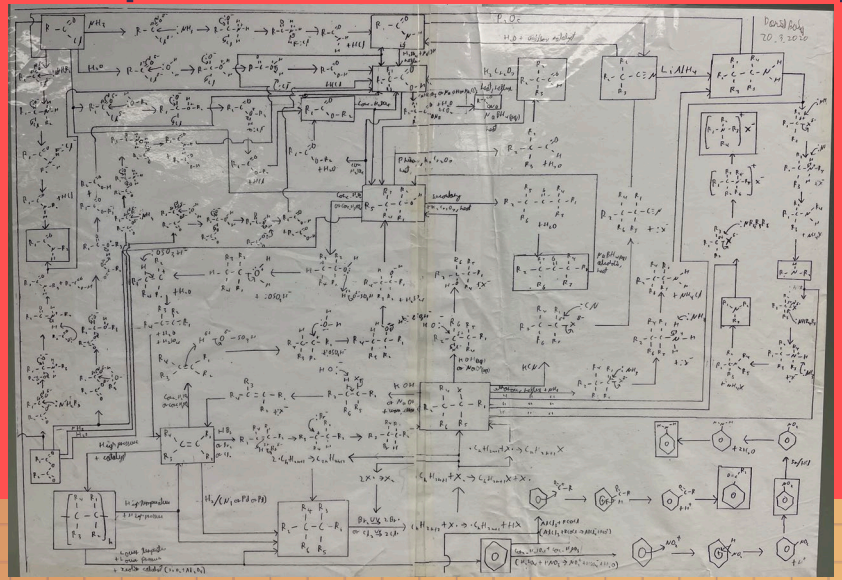

Chemistry

Practice the maths in Chemistry!

Create a masterlist of definitions and formulas

Draw a map of chemical reaction pathways

Watch videos on the topics that are more difficult

Use examiner's reports

Useful Websites:

https://www.chemrevise.org/

https://www.physicsandmathstutor.com/

Physics

Use a variety of resources to learn from

Complete every past paper available

Redo them if you have time

Use examiner's reports

Improve your maths skills

Useful Websites:

https://www.alevelphysicsonline.com/

http://cowenphysics.com/

Useful Websites

CHOOSING A LEVELS

- https://www.ucas.com/
- https://www.theuniguide.co.uk/advice/a-level-choices/
- https://www.thecompleteuniversityguide.co.uk/
- https://www.aqa.org.uk/subjects/science/as-and-a-level

SCIENCE REVISION WEBSITES

- https://www.revisely.co.uk/
- https://www.freesciencelessons.co.uk/
- https://studymind.co.uk/
- https://thecrashcourse.com/

Thanks!

Do you have any questions?

BAYSIDE SCHOOL
50TH ANNIVERSARY

Bayside Science Department